C1,C2容值随晶振的选择而定

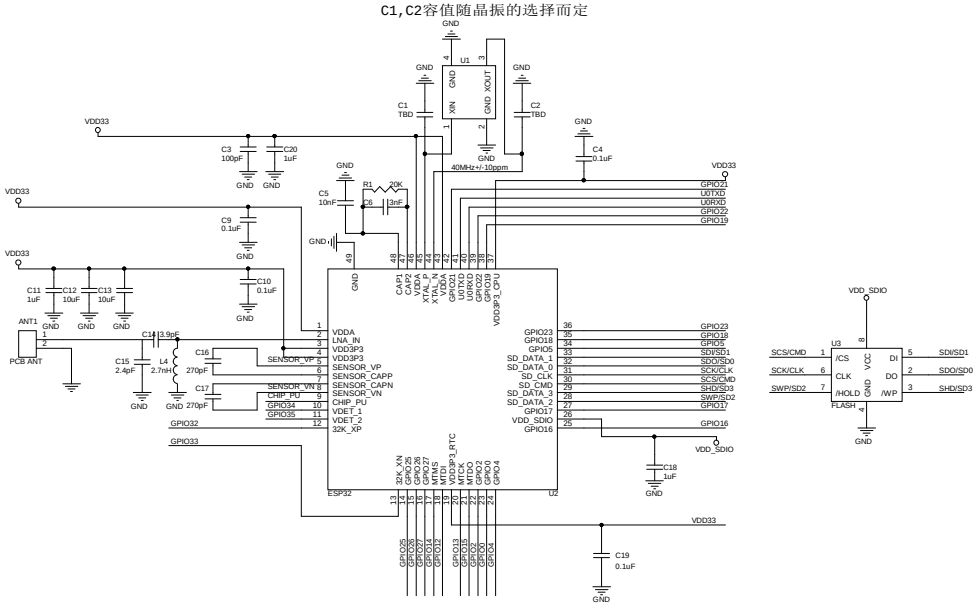

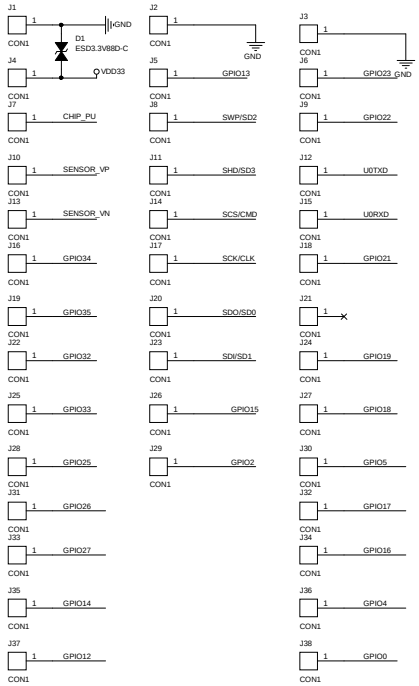

Espressif Systems

Title	<ESP31A_Module_V1>	
Size A2	Document Number <Doc>	Rev
Date: Wednesday, September 14, 2016	Sheet 1 of 1	